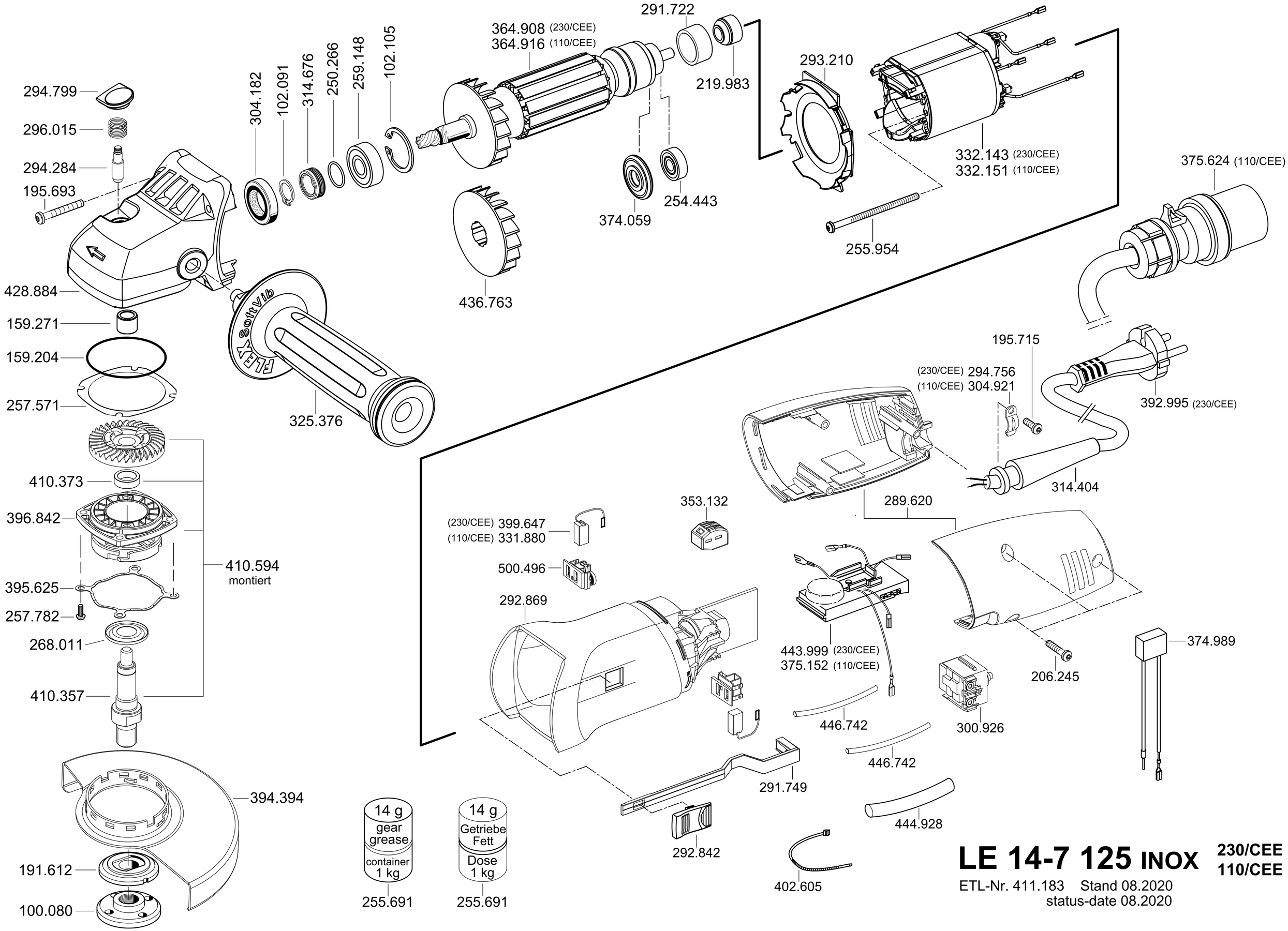
294.799
296.015
294.284
195.693
428.884
159.271
159.204
257.571
410.373
396.842
395.625
257.782
268.011
410.357
394.394
191.612
100.080
410.594
montiert
304.182
102.091
314.676
250.266
259.148
102.105
364.908 (230/CEE)
364.916 (110/CEE)
291.722
219.983
293.210
332.143 (230/CEE)
332.151 (110/CEE)
375.624 (110/CEE)
374.059
254.443
255.954
436.763
325.376
195.715
(230/CEE) 294.756
(110/CEE) 304.921
392.995 (230/CEE)
314.404
289.620
353.132
(230/CEE) 399.647
(110/CEE) 331.880
500.496
292.869
443.999 (230/CEE)
375.152 (110/CEE)
206.245
374.989
446.742
300.926
446.742
291.749
444.928
292.842
402.605
14 g
gear
grease
container
1 kg
255.691
14 g
Getriebe
Fett
Dose
1 kg
255.691
LE 14-7 125 INOX
230/CEE
110/CEE
ETL-Nr. 411.183 Stand 08.2020
status-date 08.2020